NOTES:

APPROVED 11kV CABLE MARKER TAPE TO BE LAID 75mm ABOVE CABLE.

ALL CABLES SHOULD BE BEDDED IN BACKFILL MATERIAL IN ACCORDANCE WITH SP ENERGY NETWORKS DOCUMENT CAB-15-003 'HANDLING AND INSTALLATION OF CABLES UP TO AND INCLUDING 33kV'.

ALL DIMENSIONS SHOWN ARE IN MILLIMETRES AND ARE MINIMUM REQUIREMENTS.

DIMENSION ***
600mm FOR UNMADE GROUND AND FOOTPATHS
775mm FOR ROADS AND CULTIVATED GROUND.
910mm FOR AGRICULTURAL LAND.

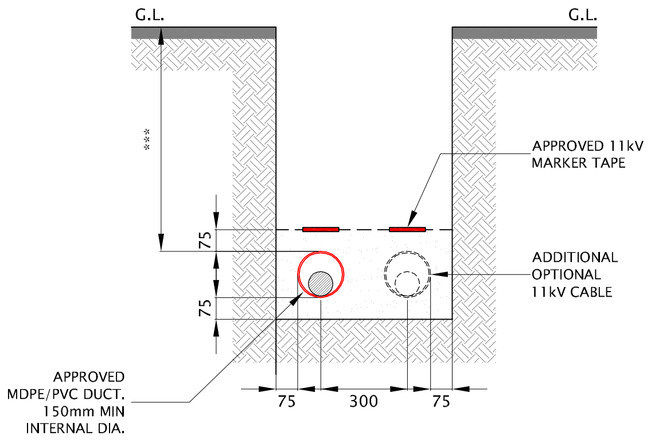

TRENCH DETAILS FOR DUCTED
11kV TWIN CIRCUIT INSTALLATION

NOTES:

APPROVED 11kV CABLE MARKER TAPE TO BE LAID 75mm ABOVE CABLE.

ALL CABLES SHOULD BE BEDDED IN BACKFILL MATERIAL IN ACCORDANCE WITH SP ENERGY NETWORKS DOCUMENT CAB-15-003 'HANDLING AND INSTALLATION OF CABLES UP TO AND INCLUDING 33kV'.

ALL DIMENSIONS SHOWN ARE IN MILLIMETRES AND ARE MINIMUM REQUIREMENTS.

DIMENSION ***
600mm FOR UNMADE GROUND AND FOOTPATHS
775mm FOR ROADS AND CULTIVATED GROUND.
910mm FOR AGRICULTURAL LAND.

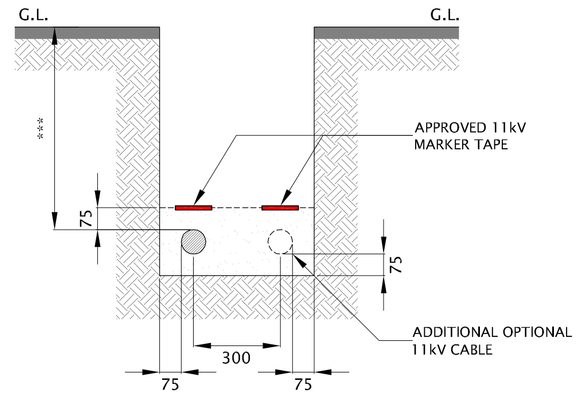

TRENCH DETAILS FOR DIRECT LAID
11kV CABLE INSTALLATION
(1 CIRCUIT + 1 OPTIONAL)

NOTES:

APPROVED LV CABLE MARKER TAPE TO BE LAID 200mm ABOVE CABLE.

ALL CABLES SHOULD BE BEDDED IN BACKFILL MATERIAL IN ACCORDANCE WITH SP ENERGY NETWORKS DOCUMENT CAB-15-003 'HANDLING AND INSTALLATION OF CABLES UP TO AND INCLUDING 33kV'.

ALL DIMENSIONS SHOWN ARE IN MILLIMETRES AND ARE MINIMUM REQUIREMENTS.

DIMENSION ***
450mm FOR UNMADE GROUND AND FOOTPATHS
600mm FOR ROADS AND CULTIVATED GROUND.
910mm FOR AGRICULTURAL LAND.

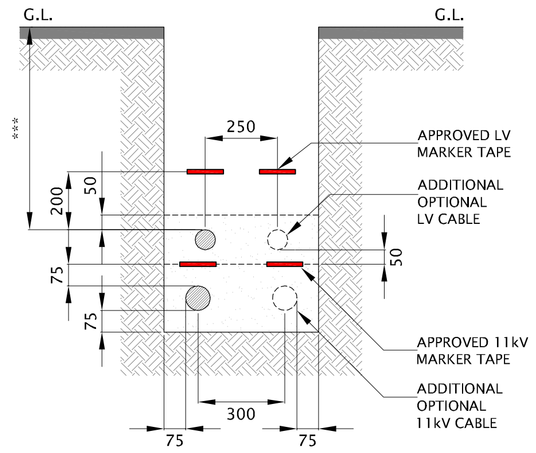

TRENCH DETAILS FOR DIRECT LAID
11kV CABLE INSTALLATION WITH LV CABLES ABOVE
(1 CIRCUIT + 1 OPTIONAL)

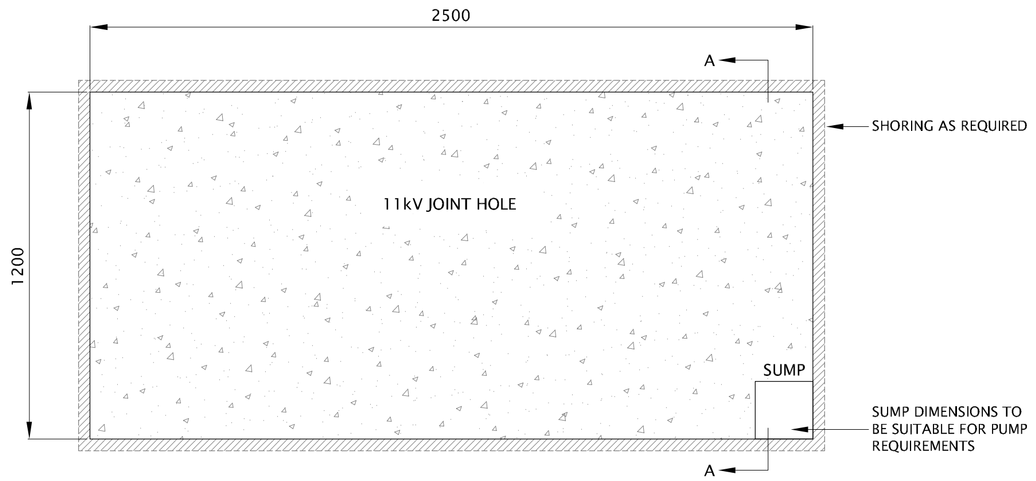

PLAN

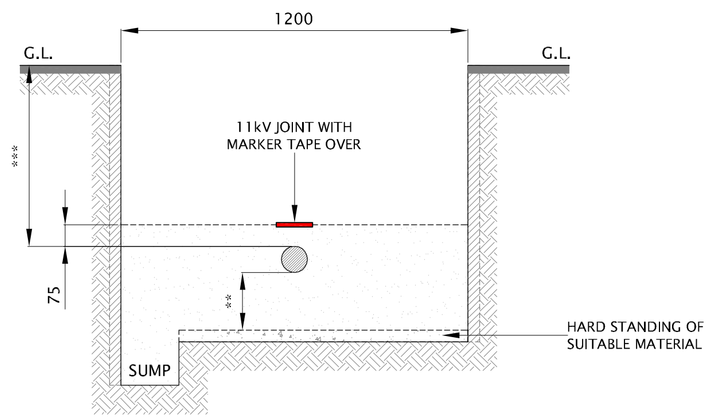

SECTION A-A

11kV JOINT HOLE DIMENSIONS FOR
BREECH AND LOOP JOINTS

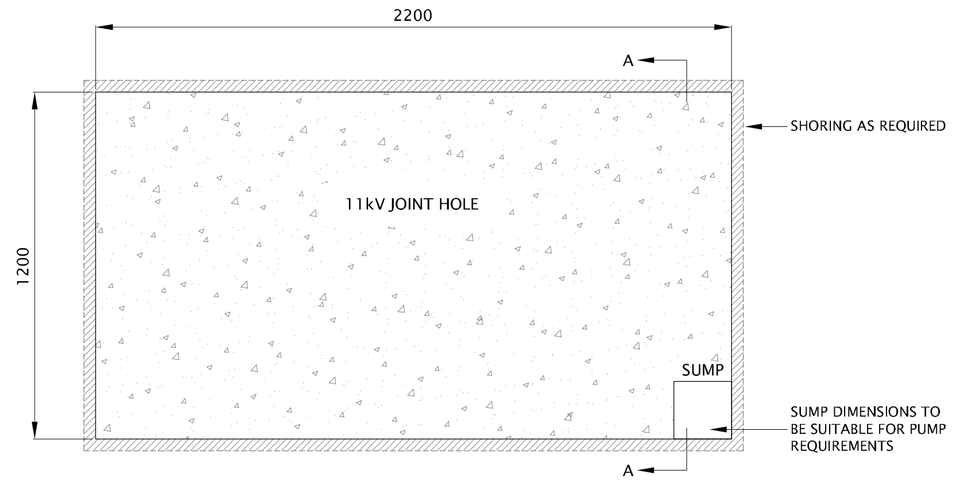

PLAN

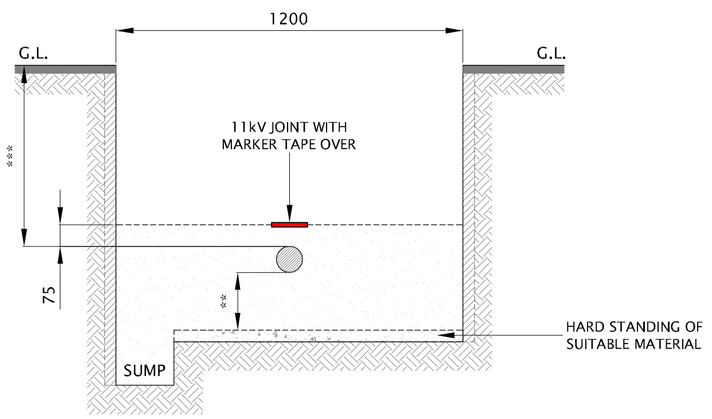

SECTION A-A

11kV JOINT HOLE DIMENSIONS FOR ALL
JOINTS EXCEPT BREECH AND LOOP JOINTS

TRENCH PROFILE NOTES:

FOR WORK ON OR NEAR RAILWAY PROPERTY INCLUDING LEVEL CROSSINGS THE CONTRACTOR SHOULD REFER TO THE SP ENERGY NETWORKS PROJECT MANAGER AND RECOGNISED RAILWAY AUTHORITY

JOINT HOLE NOTES:

JOINT HOLE TO BE CLOSE SHORED IF REQUIRED IN ACCORDANCE WITH THE APPROPRIATE STATUTORY REGULATIONS.

FLOOR OF THE JOINT HOLE TO BE DRY, LEVEL AND HAVE A HARD STANDING OF SUITABLE MATERIAL.

ALL JOINTS TO HAVE 75mm MINIMUM COVER WITH SELECTED BACKFILL AND CABLE MARKER TAPE. MINIMUM DEPTH TO CABLE COVERS TO BE MAINTAINED.

SUMP DIMENSIONS TO BE SUITABLE FOR PUMP REQUIREMENTS.

ALL CABLES SHOULD BE BEDDED IN BACKFILL MATERIAL IN ACCORDANCE WITH POWER SYSTEMS DOCUMENT CAB-15-003 "HANDLING AND INSTALLATION OF CABLES UP TO AND INCLUDING 33kV"

ALL DIMENSIONS SHOWN ARE IN MILLIMETRES AND ARE MINIMUM SIZES.

FOR WORK ON OR NEAR RAILWAY PROPERTY INCLUDING LEVEL CROSSINGS THE CONTRACTOR SHOULD REFER TO THE SP ENERGY NETWORKS PROJECT MANAGER AND THE RECOGNISED AUTHORITY.

*** REFER TO CAB-15-003

** MINIMUM CLEARANCE OF 200mm IS REQUIRED BELOW JOINTS

GENERAL NOTES:

HV - HIGH VOLTAGE (11kV)

THE CUSTOMER MUST ENSURE THAT ANY EXCAVATIONS THEY CARRY OUT ARE COMPLETED AS PER NATIONAL JOINT UTILITIES GROUP (NJUG) RECOMMENDATIONS. THE EXCAVATIONS SHOULD BE CARRIED OUT ON A JUST-IN-TIME BASIS WITH PRIOR AGREEMENT FROM US AND TO OUR SATISFACTION.

ALL DUCT MUST COMPLY WITH THE CURRENT EDITION OF THE ELECTRICITY ASSOCIATION TECHNICAL SPECIFICATION (EATS) - SPECIFICATION 12-24.

YOUR SAFETY:

TO AVOID DANGER FROM CABLES AND OVERHEAD LINES, IT IS VERY IMPORTANT THAT YOU, YOUR CONTRACTORS AND SUBCONTRACTORS FOLLOW THE ADVICE GIVEN IN THE HEALTH AND SAFETY EXECUTIVE (HSE) DOCUMENTS HSE HSG 47 AVOIDING DANGER FROM UNDERGROUND SERVICES AND HSE GS 6 AVOIDANCE OF DANGER FROM OVERHEAD ELECTRIC POWER LINES, WHICH CAN BE FOUND AT:
WWW.HSE.GOV.UK

POWER LOSS AND EMERGENCIES:

PLEASE USE THE FOLLOWING NUMBERS (AVAILABLE 24 HOURS A DAY) IN THE EVENT OF AN EMERGENCY:

CENTRAL AND SOUTHERN SCOTLAND

0845 2727 999

CHESHIRE, MERSEYSIDE, N. WALES AND N. SHROPSHIRE

0845 2727 424

Title

TYPICAL HV TRENCH
AND
JOINT HOLES

SP ENERGY NETWORKS

Scale	Date	Drawn	Checked	Approved
1:15	30.09.13	JLR	AP	AP

Rev	Date	Drawn	Checked	Approved

Status: -

A1

Drg. No.: -

Rev.: -